# Peerless

# DX20BF00-04

## TWEETER

- Ferrite Magnet
- Fabric Diaphragm
- Silk Surround
- Ferrofluid Filled Motor
- Faceplate



| SPECIFICATIONS | | | |
|---|---|---|---|
| **Transducer Size** | | 0.75 | in |
| **Impedance** | | 4 | Ω |
| **Frequency Range** [1] | | 800 - 20000 | Hz |
| **Sensitivity** [2] **(2.83V \| 1W @ 1m)** | | 88 \| 84.9 | dB |
| **Power Rating (IEC 268-5)** | | 10 | W |
| **Voice Coil Size** | | 19.4 | mm |
| **Air Gap \| Winding Height** | $H_{ag}$ \| $H_{vc}$ | 2 \| 1.63 | mm |
| **Net Weight** | | 0.158 | kg |
| **PARAMETERS** [3] | | | |
| **Eff. Piston Area** | $S_d$ | 4.52 | $cm^2$ |
| **DC Resistance** | $R_e$ | 3 | Ω |
| **Minimum Impedance** | $Z_{min}$ | 3.3 | Ω |
| **Inductance** | $L_e$ | 0.012 | mH |
| **Resonance Frequency** [4] | $F_s$ | 840 | Hz |
| **Mechanical Q Factor** | $Q_{ms}$ | 3.05 | - |
| **Electrical Q Factor** | $Q_{es}$ | 2.92 | - |
| **Total Q Factor** | $Q_{ts}$ | 1.5 | - |
| **Moving Mass** | $M_{ms}$ | 0.142 | g |
| **Compliance** | $C_{ms}$ | 250 | µm/N |
| **Equivalent Volume** | $V_{as}$ | 0.007 | L |
| **Motor Force Factor** | Bl | 0.869 | Tm |
| **Motor Efficiency** | β | 0.256 | $(Bl)^2 / R_e$ |
| **Linear Excursion** [5] | $X_{max}$ | 0.728 | mm |

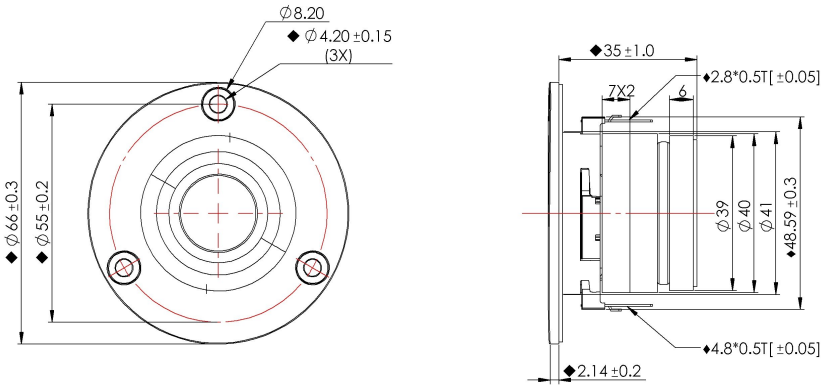


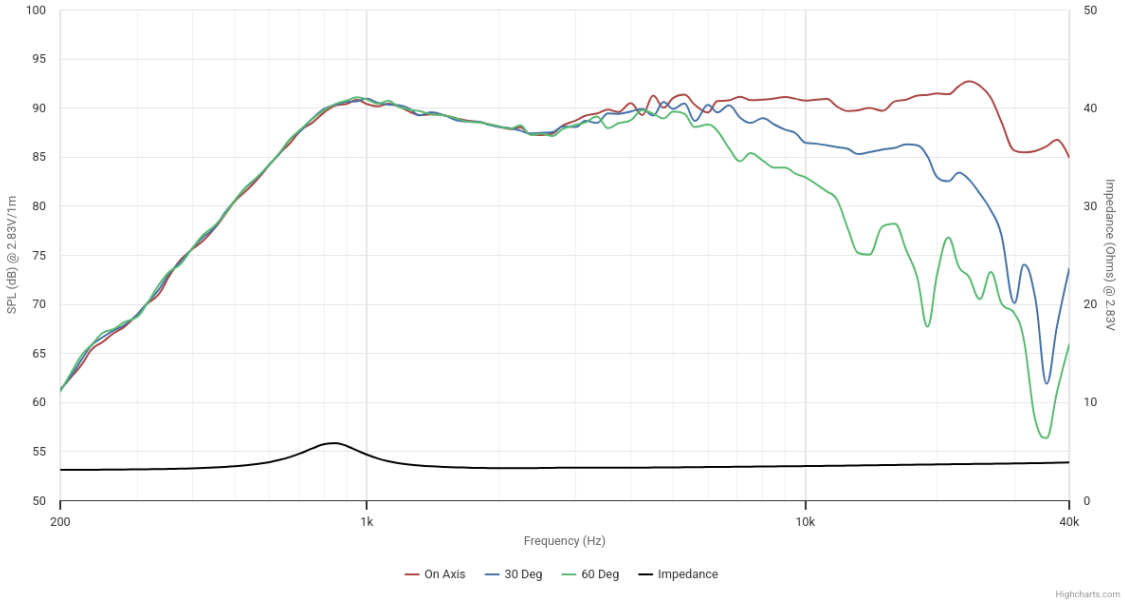


Details on this spec sheet are for reference only and should not be used for setting production limits. Specifications and product cosmetics are subject to change without notice. Peerless is a registered trademark of Tymphany Enterprises. All measurements conducted in test lab at 25°C ±10°C, 50%RH ±10%. [1] Specified by Engineering as linear working range of transducer. [2] Measured at 2.83V at 1m and normalized to 1W with respect to nominal impedance. [3] Measured in Free Air without preconditioning, therefore subject to some deviation. [4] Impedance and Fs value measured under different conditions. [5] Equal/Overhung: $(H_{vc} - H_{ag})/2 + H_{ag}/3$. Underhung: $(H_{ag} - H_{vc})/2 + H_{vc}/3$. [6] Mechanically limited excursion (e.g. bottoming, spider crash).