FSL-0512R01-08

PROFESSIONAL WOOFER

- Ferrite Magnet
- Paper Diaphragm
- Rubber Surround
- Optimized for Pro Applications



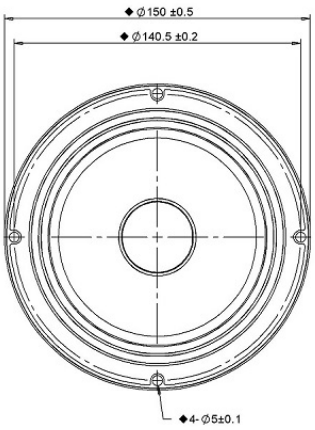

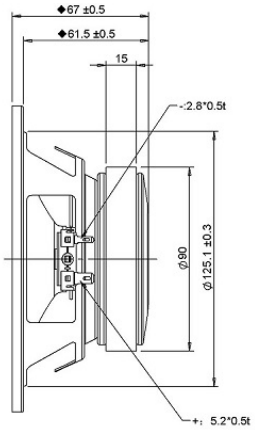

SPECIFICATIONS			
Transducer Size		5.25	in
Impedance		8	Ω
Frequency Range [1]		90 - 10000	Hz
Sensitivity [2] **(2.83V | 1W @ 1m)**		91.2 | 91.2	dB
Power Rating (AES2-1984)		90	W
Voice Coil Size		30.5	mm
Air Gap | Winding Height	H_{ag} | H_{vc}	4 | 10	mm
Net Weight		0.98	kg
PARAMETERS [3]			
Eff. Piston Area	S_d	100	cm^2
DC Resistance	R_e	5.9	Ω
Minimum Impedance	Z_{min}	6.5	Ω
Inductance	L_e	0.278	mH
Resonance Frequency [4]	F_s	120	Hz
Mechanical Q Factor	Q_{ms}	2.41	-
Electrical Q Factor	Q_{es}	0.76	-
Total Q Factor	Q_{ts}	0.58	-
Moving Mass	M_{ms}	6.99	g
Compliance	C_{ms}	240	µm/N
Equivalent Volume	V_{as}	3.48	L
Motor Force Factor	Bl	6.44	Tm
Motor Efficiency	β	7.04	$(Bl)^2 / R_e$
Linear Excursion [5]	X_{max}	4.33	mm
Max Mechanical Excursion [6]	X_{mech}	4.8	mm

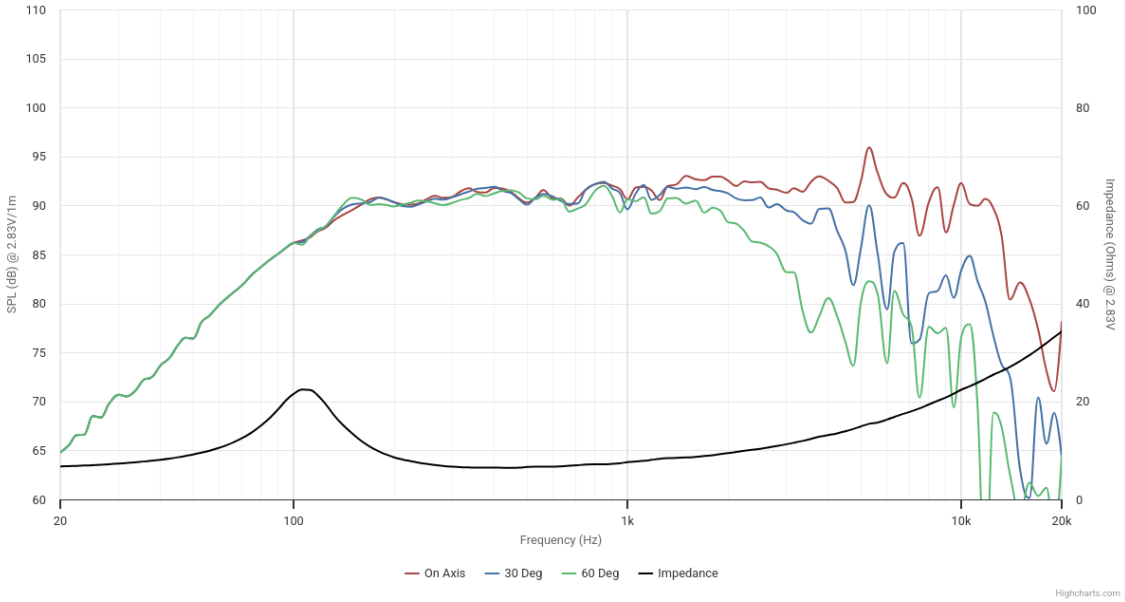

Details on this spec sheet are for reference only and should not be used for setting production limits. Specifications and product cosmetics are subject to change without notice. Peerless is a registered trademark of Tymphany Enterprises. All measurements conducted in test lab at 25°C ±10°C, 50%RH ±10%. [1] Specified by Engineering as linear working range of transducer. [2] Measured at 2.83V at 1m and normalized to 1W with respect to nominal impedance. [3] Measured in Free Air without preconditioning, therefore subject to some deviation. [4] Impedance and Fs value measured under different conditions. [5] Equal/Overhung: $(H_{vc} - H_{ag})/2 + H_{ag}/3$. Underhung: $(H_{ag} - H_{vc})/2 + H_{vc}/3$. [6] Mechanically limited excursion (e.g. bottoming, spider crash).