GBS-135F25AL02-04

WOOFER

- Low-Profile
- Aluminum Diaphragm
- Rubber Surround
- Ferrite Magnet
- High Excursion



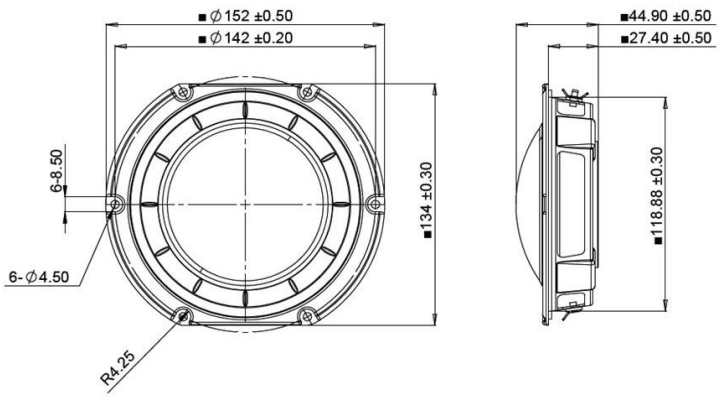

SPECIFICATIONS			
Transducer Size		5.25	in
Impedance		4	Ω
Frequency Range [1]		100 - 3000	Hz
Sensitivity [2] **(2.83V | 1W @ 1m)**		87.8 | 84.8	dB
Power Rating (IEC 268-5)		35	W
Voice Coil Size		25.5	mm
Air Gap | Winding Height	H_{ag} | H_{vc}	6 | 12.7	mm
Net Weight		0.82	kg
PARAMETERS [3]			
Eff. Piston Area	S_d	86.6	cm^2
DC Resistance	R_e	3.3	Ω
Minimum Impedance	Z_{min}	3.8	Ω
Inductance	L_e	0.436	mH
Resonance Frequency [4]	F_s	64	Hz
Mechanical Q Factor	Q_{ms}	4.33	-
Electrical Q Factor	Q_{es}	0.681	-
Total Q Factor	Q_{ts}	0.59	-
Moving Mass	M_{ms}	12.3	g
Compliance	C_{ms}	500	µm/N
Equivalent Volume	V_{as}	5.3	L
Motor Force Factor	Bl	4.93	Tm
Motor Efficiency	β	7.29	$(Bl)^2 / R_e$
Linear Excursion [5]	X_{max}	5.37	mm
Max Mechanical Excursion [6]	X_{mech}	11.5	mm

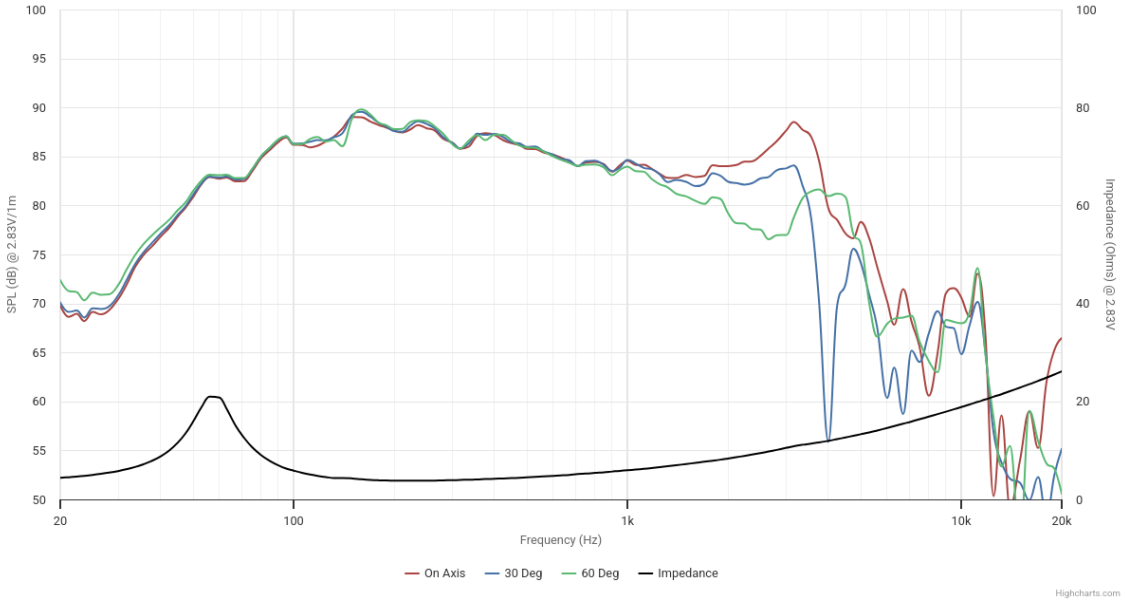

Details on this spec sheet are for reference only and should not be used for setting production limits. Specifications and product cosmetics are subject to change without notice. Peerless is a registered trademark of Tymphany Enterprises. All measurements conducted in test lab at 25°C ±10°C, 50%RH ±10%. [1] Specified by Engineering as linear working range of transducer. [2] Measured at 2.83V at 1m and normalized to 1W with respect to nominal impedance. [3] Measured in Free Air without preconditioning, therefore subject to some deviation. [4] Impedance and Fs value measured under different conditions. [5] Equal/Overhung: $(H_{vc} - H_{ag})/2 + H_{ag}/3$. Underhung: $(H_{ag} - H_{vc})/2 + H_{vc}/3$. [6] Mechanically limited excursion (e.g. bottoming, spider crash).

© Tymphany Enterprises