# Peerless

# TC9FD18-08

## FULLRANGE

- Ferrite Magnet
- Copper Cap
- Patented PentaCut Cone Technology
- NBR Rubber Surround
- Aluminum Diaphragm



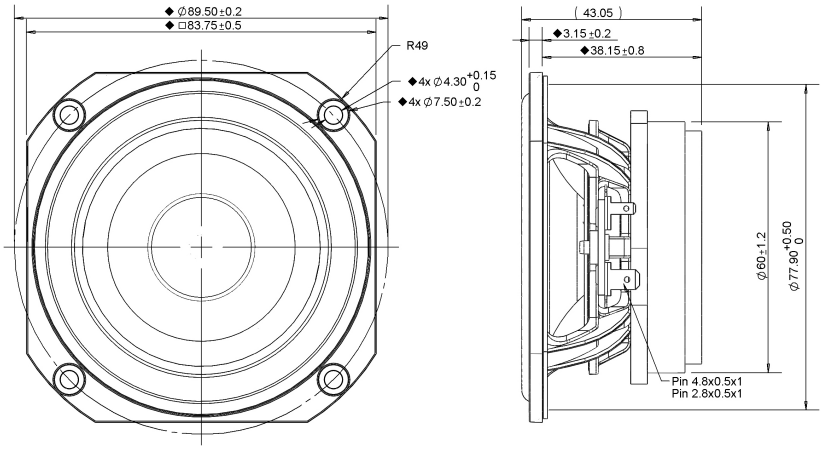


| SPECIFICATIONS | | | |
|---|---|---|---|
| **Transducer Size** | | 3.5 | in |
| **Impedance** | | 8 | Ω |
| **Frequency Range** [1] | | 70 - 20000 | Hz |
| **Sensitivity** [2] **(2.83V \| 1W @ 1m)** | | 84 \| 84 | dB |
| **Power Rating (IEC 268-5)** | | 30 | W |
| **Voice Coil Size** | | 19.4 | mm |
| **Air Gap \| Winding Height** | $H_{ag}$ \| $H_{vc}$ | 4 \| 9.1 | mm |
| **Net Weight** | | 0.3 | kg |
| **PARAMETERS** [3] | | | |
| **Eff. Piston Area** | $S_d$ | 36.3 | $cm^2$ |
| **DC Resistance** | $R_e$ | 6.2 | Ω |
| **Minimum Impedance** | $Z_{min}$ | 7 | Ω |
| **Inductance** | $L_e$ | 0.108 | mH |
| **Resonance Frequency** [4] | $F_s$ | 130 | Hz |
| **Mechanical Q Factor** | $Q_{ms}$ | 2.97 | - |
| **Electrical Q Factor** | $Q_{es}$ | 1.44 | - |
| **Total Q Factor** | $Q_{ts}$ | 0.97 | - |
| **Moving Mass** | $M_{ms}$ | 2.67 | g |
| **Compliance** | $C_{ms}$ | 520 | µm/N |
| **Equivalent Volume** | $V_{as}$ | 0.978 | L |
| **Motor Force Factor** | Bl | 3.13 | Tm |
| **Motor Efficiency** | β | 1.57 | $(Bl)^2 / R_e$ |
| **Linear Excursion** [5] | $X_{max}$ | 3.88 | mm |
| **Max Mechanical Excursion** [6] | $X_{mech}$ | 6.85 | mm |

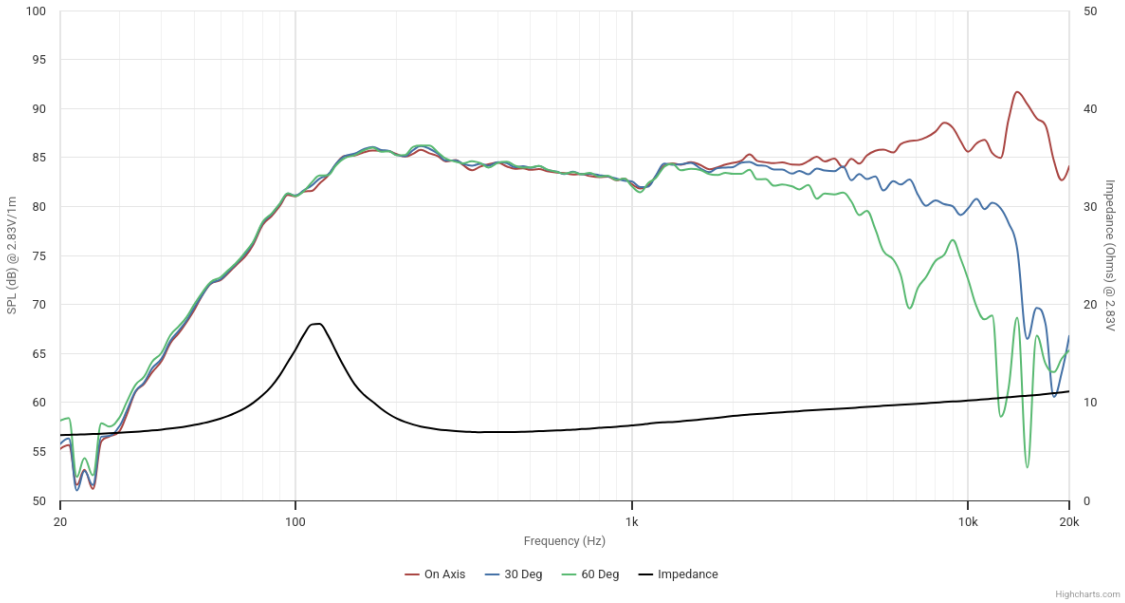


Details on this spec sheet are for reference only and should not be used for setting production limits. Specifications and product cosmetics are subject to change without notice. Peerless is a registered trademark of Tymphany Enterprises. All measurements conducted in test lab at 25°C ±10°C, 50%RH ±10%. [1] Specified by Engineering as linear working range of transducer. [2] Measured at 2.83V at 1m and normalized to 1W with respect to nominal impedance. [3] Measured in Free Air without preconditioning, therefore subject to some deviation. [4] Impedance and Fs value measured under different conditions. [5] Equal/Overhung: $(H_{vc} - H_{ag})/2 + H_{ag}/3$. Underhung: $(H_{ag} - H_{vc})/2 + H_{vc}/3$. [6] Mechanically limited excursion (e.g. bottoming, spider crash).


© Tymphany Enterprises