Peerless

XT25SC90-04

TWEETER

- Patented Ring Radiator Design
- Fabric Diaphragm
- Silk Surround
- Neodymium Motor
- Faceplate



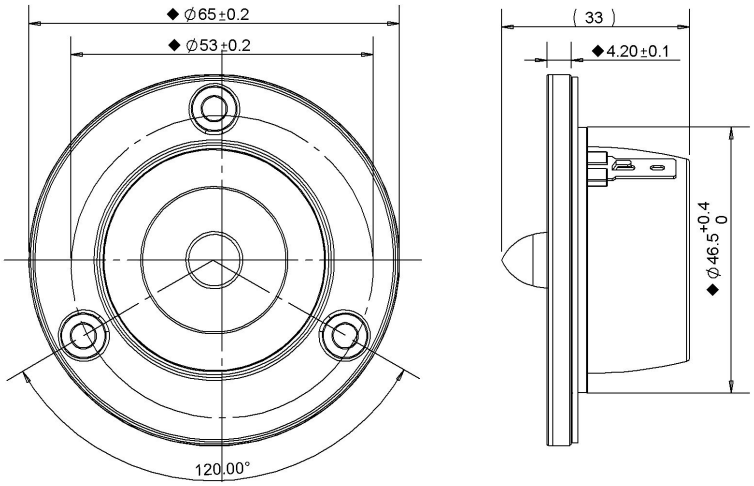

SPECIFICATIONS			
Transducer Size		25	mm
Impedance		4	Ω
Frequency Range [1]		800 - 20000	Hz
Sensitivity [2] **(2.83V | 1W @ 1m)**		90.2 | 87.2	dB
Power Rating (IEC 268-5)		15	W
Voice Coil Size		25.8	mm
Air Gap | Winding Height	H_{ag} | H_{vc}	2 | 2.4	mm
Net Weight		0.074	kg
PARAMETERS [3]			
Eff. Piston Area	S_d	7.07	cm^2
DC Resistance	R_e	3.2	Ω
Minimum Impedance	Z_{min}	3.6	Ω
Inductance	L_e	0.021	mH
Resonance Frequency [4]	F_s	830	Hz
Mechanical Q Factor	Q_{ms}	7.36	-
Electrical Q Factor	Q_{es}	1.17	-
Total Q Factor	Q_{ts}	1	-
Moving Mass	M_{ms}	0.359	g
Compliance	C_{ms}	100	µm/N
Equivalent Volume	V_{as}	0.007	L
Motor Force Factor	Bl	2.27	Tm
Motor Efficiency	β	1.61	$(Bl)^2 / R_e$
Linear Excursion [5]	X_{max}	0.867	mm

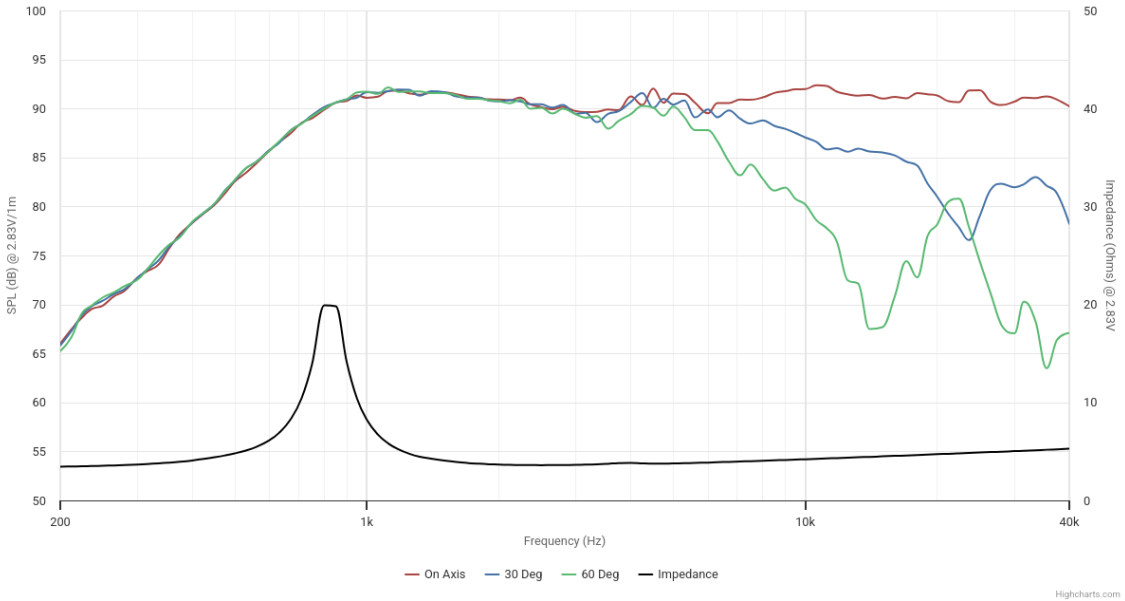

Details on this spec sheet are for reference only and should not be used for setting production limits. Specifications and product cosmetics are subject to change without notice. Peerless is a registered trademark of Tymphany Enterprises. All measurements conducted in test lab at 25°C ±10°C, 50%RH ±10%. [1] Specified by Engineering as linear working range of transducer. [2] Measured at 2.83V at 1m and normalized to 1W with respect to nominal impedance. [3] Measured in Free Air without preconditioning, therefore subject to some deviation. [4] Impedance and Fs value measured under different conditions. [5] Equal/Overhung: $(H_{vc} - H_{ag})/2 + H_{ag}/3$. Underhung: $(H_{ag} - H_{vc})/2 + H_{vc}/3$. [6] Mechanically limited excursion (e.g. bottoming, spider crash).